ISSUE DATE 02/06/2023

Konstsmide - Potenza - 7982-250 - LED White IP54 Outdoor Wall Washer Light

LED

3000K Warm White

REFERENCE

- SKU: FCL-17654
- Supplier SKU: 7982-250
- Barcode: 7318307982251

CATEGORY

- Brand: Konstsmide
- Family: Potenza
- Category: Outdoor Lighting / Wall / Washer

APPEARANCE

- Base: White Paint

DIMENSION

- Height: 270mm
- Width: 135mm
- Depth: 135mm
- Weight: .8kg

LIGHT SOURCE

- Lamp included: Yes
- Lamp detail: 4W LED (included)
- Dimmable
- Kelvin: 3000K (Warm White)
- Lumens: 350Lm
- Lamp hours: 30,000Hrs
- Colour render index: 80CRI
- Energy class: F
- Switch: No

SPECIFICATION

- Ingress protection: IP54
- Class: Class I - Single Insulated, Earthed
- Voltage: 230V

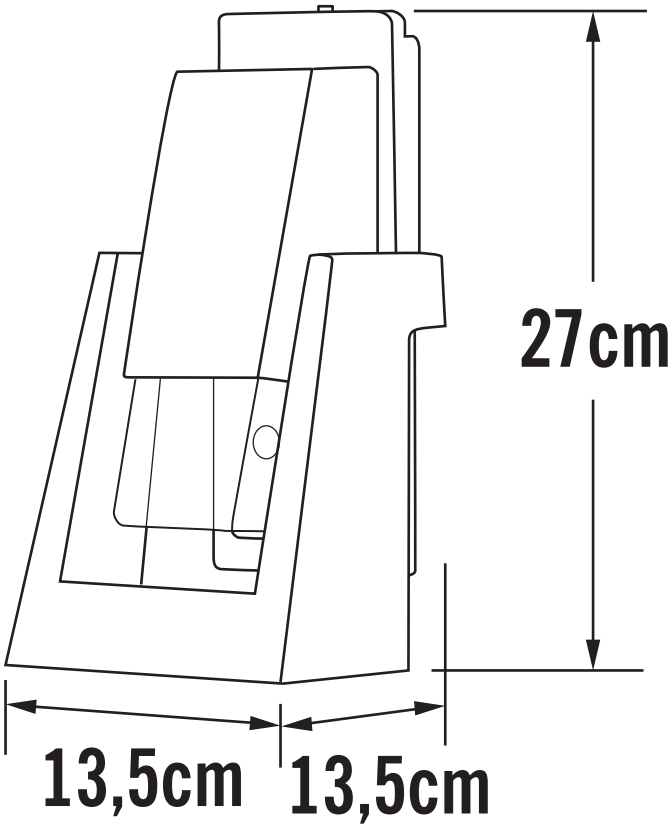

CONTACT